PRODUCT CATALOG

DUCTWORK

ABOUT US

Jose's Sheet Metal is a local family-owned and operated business that serves the Valley of the Sun. Started by father and sons in 2004 with over 20 years of experience as a foundation. We make our workmanship and customer service our priority, which has allowed us to grow our business from referrals over the last 14 years.

PRODUCTS AND SERVICES

Jose's Sheet Metal provides a wide range of products to meet the needs of every customer.
From initial design to final quality assurance processes, we make sure our goods are reliable and exceptional. We're proud to be one of the best-known names in the industry. Get in touch to see how you can benefit from our products.

DELIVERY AVAILABLE
&
FREE ESTIMATES!

ELBOWS & STANDS

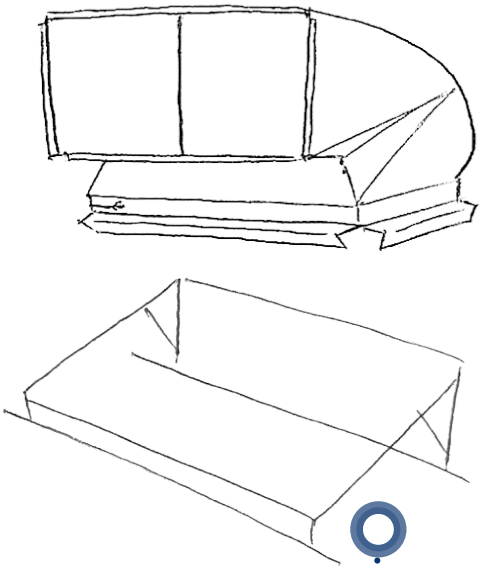

TWIST ELBOW & STAND

Customize

Sheet Metal & Angle Iron

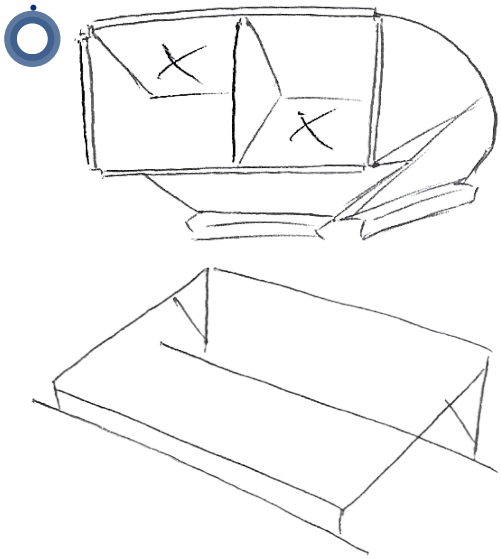

SIDE BY SIDE ELBOW & STAND

Customize

Sheet Metal & Angle Iron

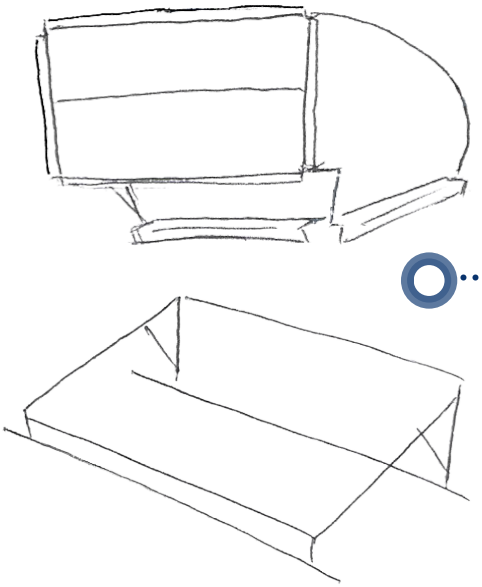

OVER AND UNDER ELBOW & STAND

Customize

Sheet Metal & Angle Iron

REVERSE ELBOW & STAND

Customize

Sheet Metal & Angle Iron

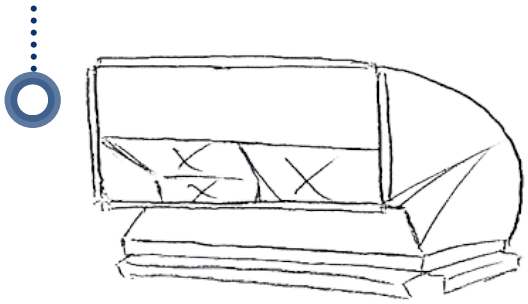

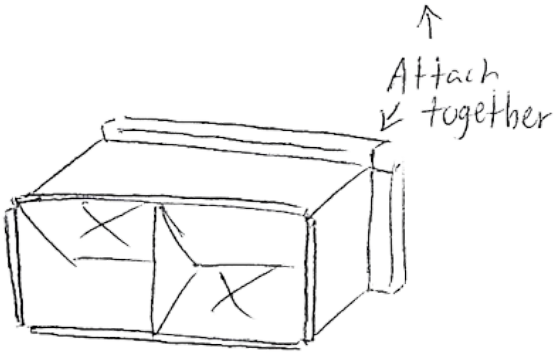

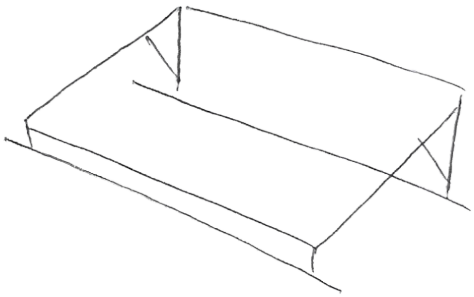

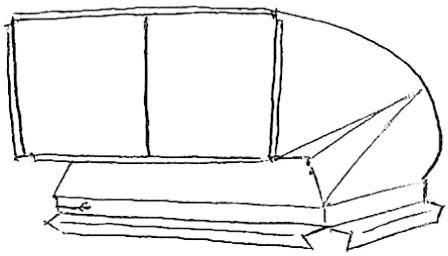

SIDE BY SIDE ELBOW ONLY

Customize

Sheet Metal

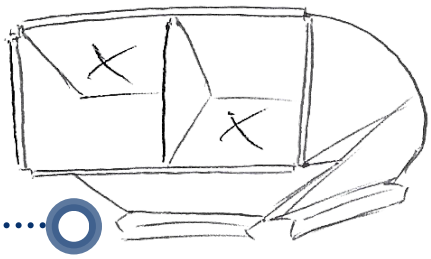

TWIST ELBOW ONLY

Customize

Sheet Metal

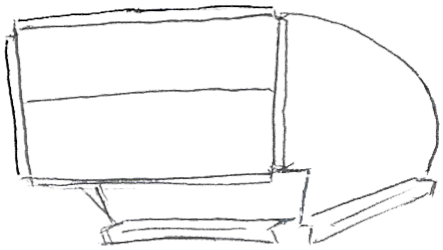

OVER AND UNDER ELBOW ONLY

Customize

Sheet Metal

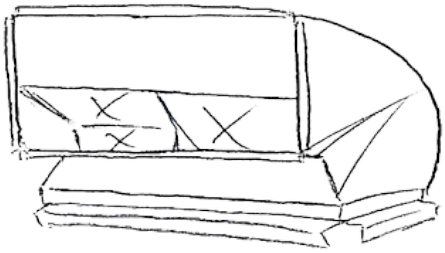

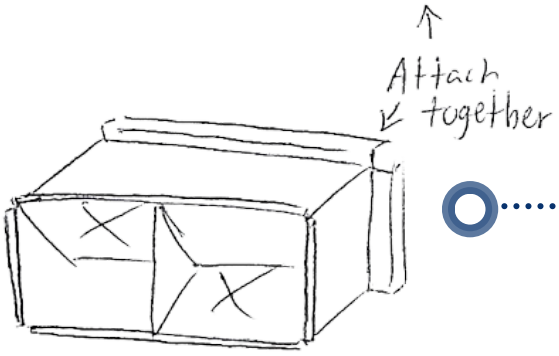

REVERSE ELBOW ONLY

Customize

Sheet Metal

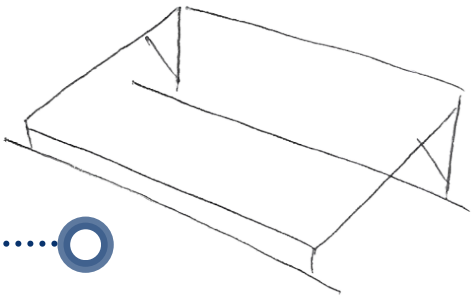

STAND ONLY

Customize

Angle Iron

TRANSITIONS & STANDS

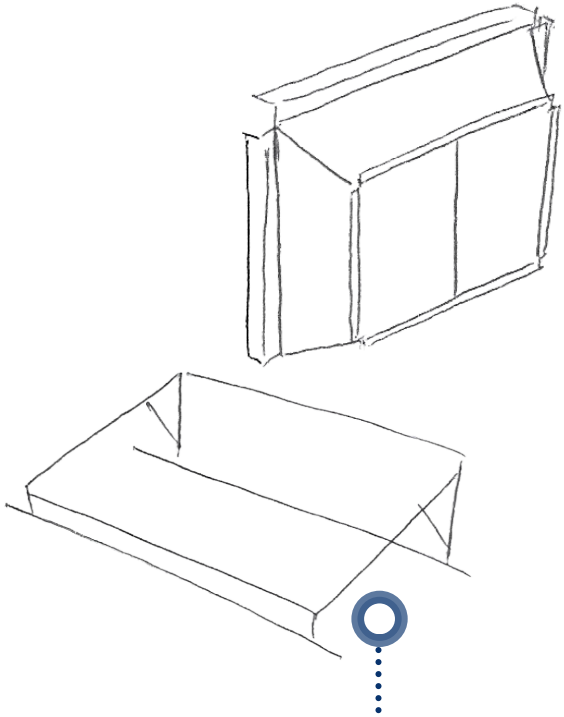

TWIST TRANS & STAND

Customize

Sheet Metal & Angle Iron

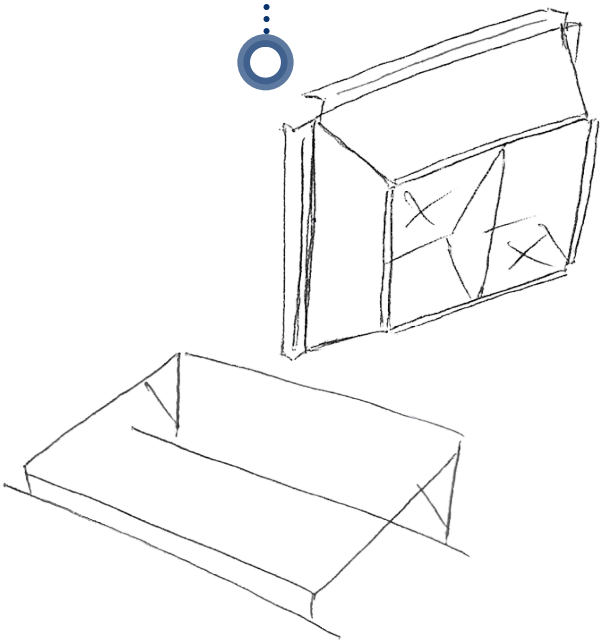

SIDE BY SIDE TRANS & STAND

Customize

Sheet Metal & Angle Iron

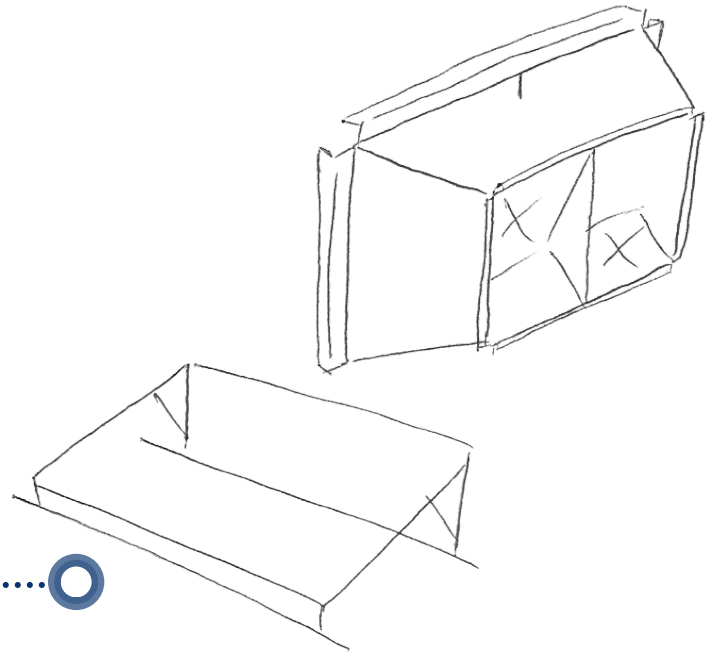

REVERSE TRANS & STAND

Customize

Sheet Metal & Angle Iron

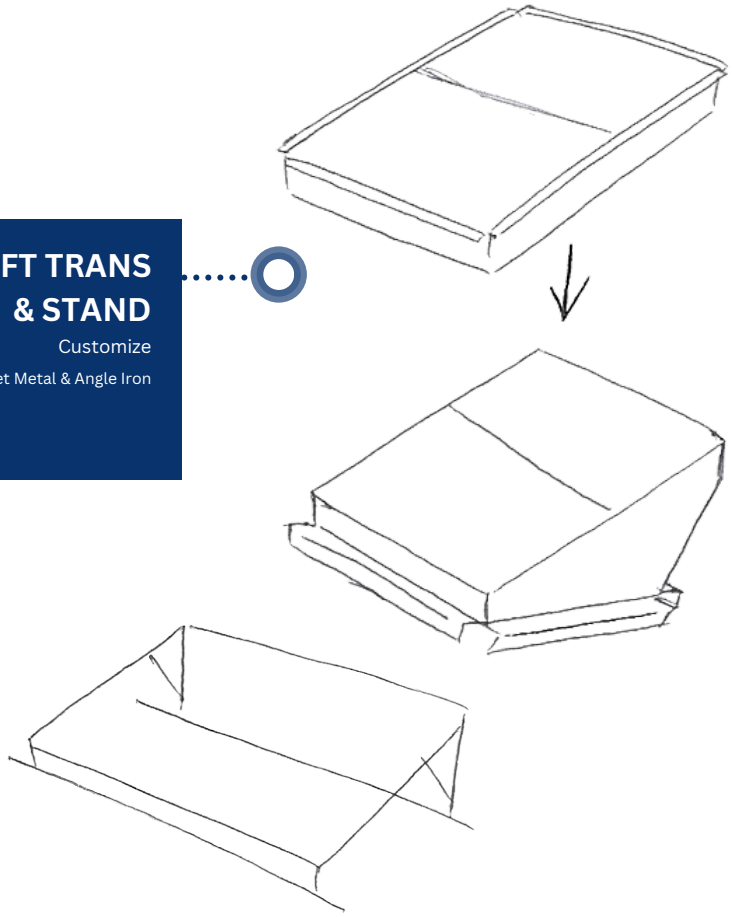

DOWN DRAFT TRANS & STAND

Customize

Sheet Metal & Angle Iron

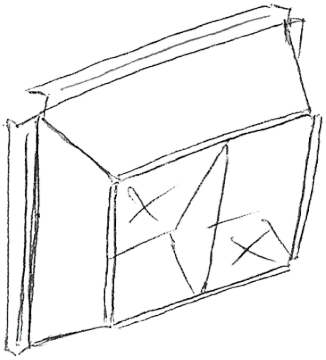

TWIST TRANS ONLY

Customize

Sheet Metal

OVER AND UNDER TRANS ONLY

Customize

Sheet Metal

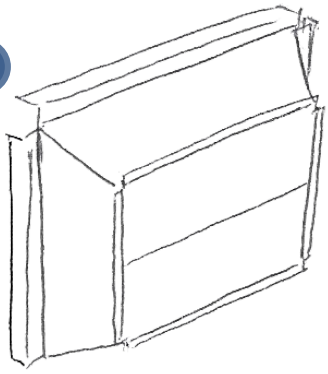

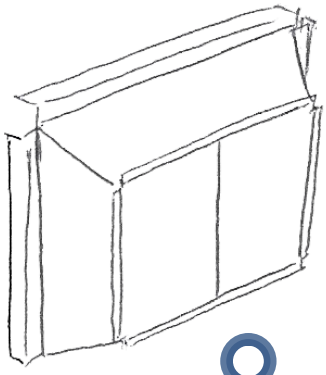

SIDE BY SIDE TRANS ONLY

Customize

Sheet Metal

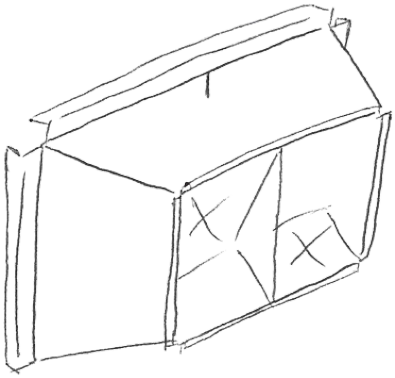

REVERSE TRANS ONLY

Customize

Sheet Metal

CURBS ADJUSTABLES

CURB ADJUSTABLE (FLAT ROOF) S/S 2.5T-5T
8" TALL WELDED RESIDENTIAL 20GA NO INS

CURB ADJUSTABLE (FOR PITCH) S/S 2.5T-5T
8" THROAT WELDED RESIDENTIAL 18GA NO INS

CURB ADJUSTABLE (FLAT ROOF) S/S 5T-7.5T
8" TALL WELDED COMMERCIAL 18GA NO INS

CURB ADJUSTABLE (FLAT ROOF) S/S 8.5T - 10T
10" TALL WELDED COMMERCIAL 18GA NO INS

CURB ADJUSTABLE (FLAT ROOF) S/S 12.5T - 15T
14" TALL WELDED COMMERCIAL 18GA NO INS

CURBS ADAPTERS

CURB ADAPTER S/S 2.5T-5T 8" TALL WELDED RESIDENTIAL 20GA 1"INS

CURB ADAPTER S/S 2.5T- 5T 8" TALL WELDED COMMERCIAL 18GA 1" INS

CURB ADAPTER S/S 6T-7.5T 8" TALL WELDED COMMERCIAL 20GA 1" INS

CURB ADAPTER S/S 8.5 TON 14"TALL WELDED COMMERCIAL 18GA 1"INS

CURB ADAPTER S/S 10 TON 14" TALL WELDED COMMERCIAL 18GA 1" INS

CURB ADAPTER S/S 12.5 TON 14" TALL WELDED COMMERCIAL 18GA 1" INS

CURB ADAPTER S/S 15 TON 14" TALL WELDED COMMERCIAL 18GA 1" INS

CURB ADAPTER S/S 20 TON 14" TALL WELDED COMMERCIAL 18GA 1" INS

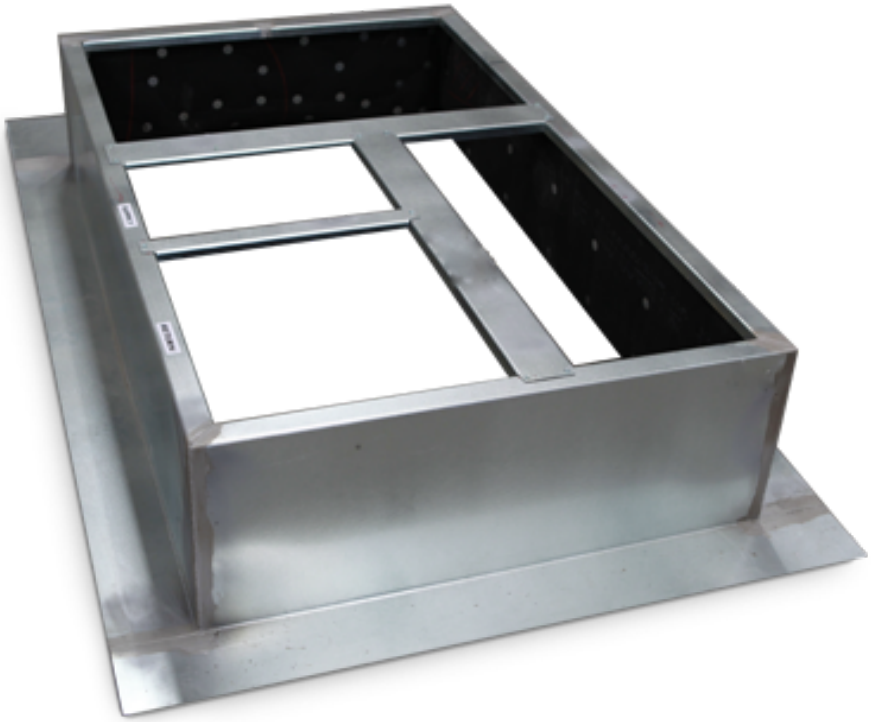

CURB ADAPTER TWIST/ TURN 90* 2.5T-5T
14"-18" TALL WELDED RESIDENTIAL 20GA 1" INS

CURB ADAPTER TWIST/TURN 90* 2.5T - 4T
14"-18" TALL WELDED COMMERCIAL 18GA 1"INS

CURB ADAPTER TWIST/TURN 90* 5T-7.5T
18"-20" TALL WELDED COMMERCIAL 18GA 1" INS

CURB ADAPTER TWIST/TURN 90* 8.5 TON
18"-20" TALL WELDED COMMERCIAL 18GA 1" INS

CURB ADAPTER TWIST/TURN 90* 10 TON
18"-20" TALL WELDED COMMERCIAL 18GA 1" INS

CURB ADAPTER TWIST/TURN 90* 12.5 TON
18"-20" TALL WELDED COMMERCIAL 18GA 1" INS

CURB ADAPTER TWIST/TURN 90* 15 TON
18"-20" TALL WELDED COMMERCIAL 18GA 1" INS

CURB ADAPTER TWIST/TURN 90* 20 TON
18"-20" TALL WELDED COMMERCIAL 18GA 1" INS

DUCTS

CUSTOMIZE
The price depends of the measurements, the insulation, the connectors and/or the gauge

NON ASSEMBLED
18X18X24" RAW FL INS 1/2"
18X18X36" RAW FL INS 1/2"
22X18X48" RAW FL INS 1/2"
19X19X24" RAW FL INS 1/2"
19X19X36" RAW FL INS 1/2"
20X20X24" RAW FL INS 1/2"
20X20X36" RAW FL INS 1/2"
22X20X24" RAW FL INS 1/2"
22X20X36" RAW FL INS 1/2"

ASSEMBLED
19X16X36" EC FL BB
20X12X36" EC EC INS 1/2"
19X19X24" EC FL INS 1/2"
19X19X36" EC FL INS 1/2"
19X19X24" EC EC INS 1/2"
19X19X36" EC EC INS 1/2"
20X20X24" EC FL INS 1/2"
20X20X36" EC FL INS 1/2"
20X20X24" EC EC INS 1/2"
20X20X36" EC EC INS 1/2"
22X20X24" EC FL INS 1/2"
22X20X36" EC FL INS 1/2"
22X20X24" EC EC INS 1/2"
22X20X36" EC EC INS 1/2"

END CAP
18X18" INS 1/2"
22X18" INS 1/2"
19X19" INS 1/2"
20X20" INS 1/2"
22X20" INS 1/2"

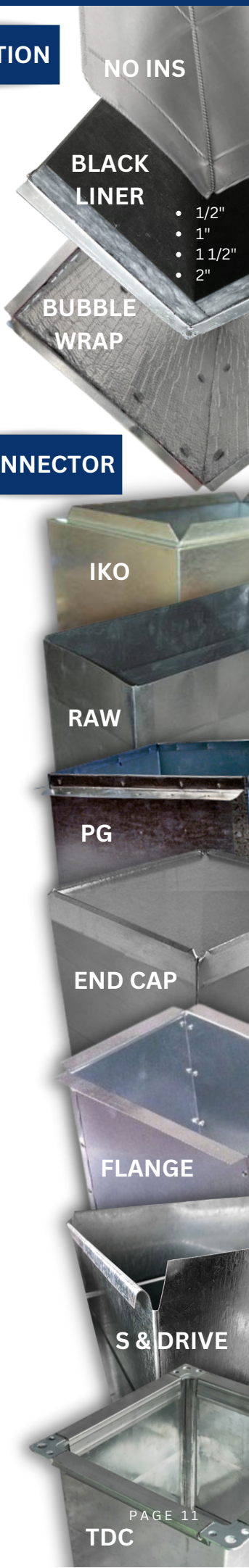

TRANSITIONS

CUSTOMIZE
The price depends of the measurements, the insulation, the connectors and/or the gauge

14X14-16X16" 12" LONG SD SD INS 1/2"
16X16-18X18" 12" LONG SD SD INS 1/2"
18X18-20X20" 12" LONG SD SD INS 1/2"
20X20-22X22" 12" LONG SD SD INS 1/2"
22X22-24X24" 12" LONG SD SD INS 1/2"
14X14-16X16" 6" LONG SD SD INS 1/2"
14X14-16X16" 12" LONG SD SD NO INS

90° ELBOWS

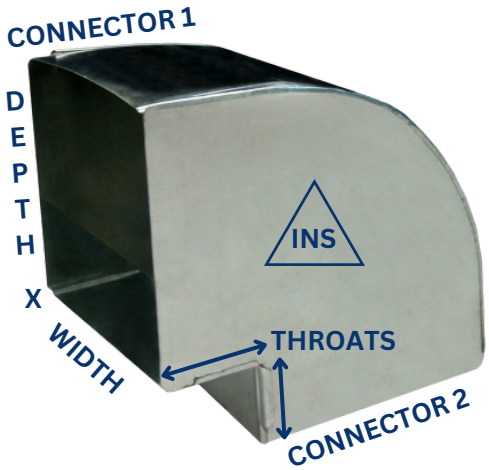

CUSTOMIZE
The price depends of the measurements, the insulation, the connectors and/or the gauge

16X16" 6" THROATS SD SD INS 1/2"
18X18" 6" THROATS SD SD INS 1/2"
20X20" 6" THROATS SD SD INS 1/2"
22X22" 6" THROATS SD SD INS 1/2"
24X24" 6" THROATS SD SD INS 1/2"
16X16" 4" THROATS SD SD INS 1/2"

FLEX CONNECTORS

CUSTOMIZE
The price depends of the measurements, the connectors and/or the gauge

16X16" SD FL
18X18" SD FL
20X20" RAW FL
22X22" RAW FL
24X24" SD SD
16X16" TDC FL

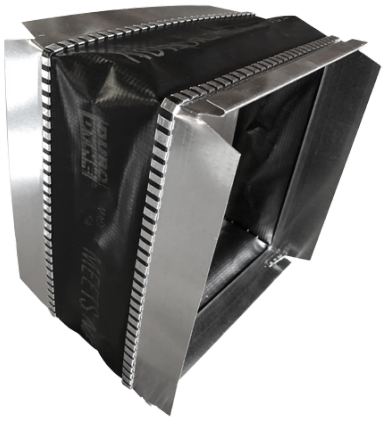

FLAT METAL

SHEET 48"X120"
SHEET 26GA 4'X10'
SHEET 24GA 4'X10'
SHEET 22GA 4'X10'
SHEET 20GA 4'X10'
SHEET 18GA 4'X10'
SHEET 16GA 4'X10'

SHEET 60"X120"
SHEET 26GA 5'X10'
SHEET 24GA 5'X10'
SHEET 22GA 5'X10'
SHEET 20GA 5'X10'
SHEET 18GA 5'X10'

CUSTOMIZE
The price depends of the measurements and/or the gauge

PRE-CUT
PRE-CUT 26GA
PRE-CUT 24GA
PRE-CUT 22GA
PRE-CUT 20GA
PRE-CUT 18GA
PRE-CUT 16GA

BULLHEAD TEES

BULLHEAD TEE 6X6X6 6" THROAT
BULLHEAD TEE 8X8X8 6" THROAT
BULLHEAD TEE 10X10X10 6" THROAT
BULLHEAD TEE 12X12X12 6" THROAT
BULLHEAD TEE14X14X14 6" THROAT
BULLHEAD TEE 16X16X16 6" THROAT
BULLHEAD TEE 18X18X18 6" THROAT
BULLHEAD TEE 20X20X20 6" THROAT

TEE TOPS

TEE TOP 4"
TEE TOP 7"
TEE TOP 10"

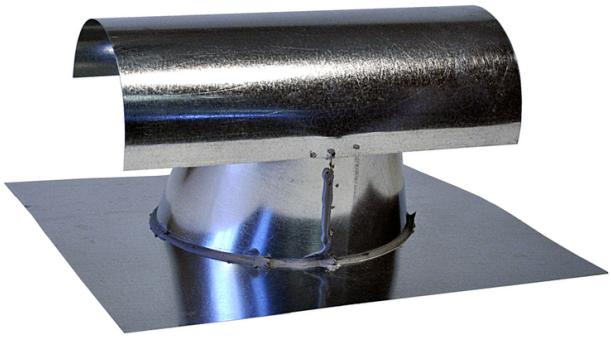

COLLARS

COLLARS 4"
COLLARS 5"
COLLARS 6"
COLLARS 7"
COLLARS 8"
COLLARS 9"
COLLARS 10"
COLLARS 12"
COLLARS 14"
COLLARS 16"
COLLARS 18"
COLLARS 20"

COUPLINGS

COUPLING 4"
COUPLING 5"
COUPLING 6"
COUPLING 8"
COUPLING 10"
COUPLING 12"
COUPLING 14"
COUPLING 16"
COUPLING 18"
COUPLING 20"
COUPLING 22"
COUPLING 24"
COUPLING 26"

ROOF JACKS

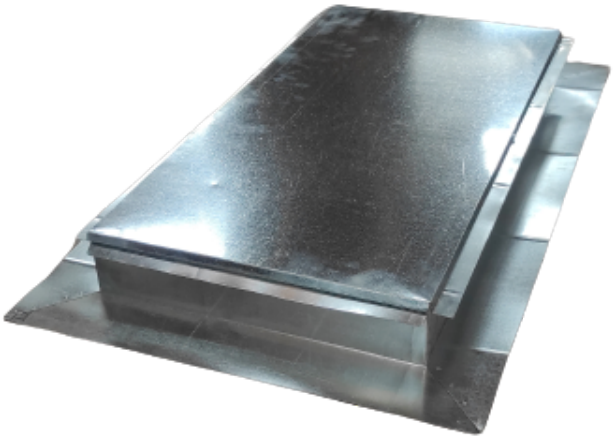

ROOF JACK 35"X20"
ROOF JACK 40"X20"
ROOF JACK 43"X20"

DRAIN PANS

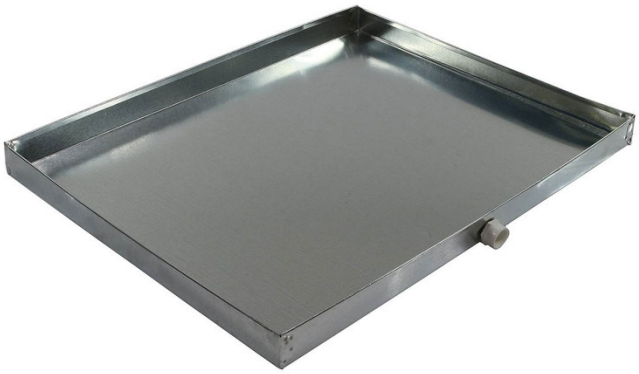

DRAIN PAN 30"X30"
DRAIN PAN 60"X30"
DRAIN PAN 66"X30"

TYES

TYE 6X4X4
TYE 6X6X4
TYE 6X6X6
TYE 7X5X5
TYE 7X6X4
TYE 7X8X5
TYE 8X4X4
TYE 8X5X5
TYE 8X6X4
TYE 8X6X5
TYE 8X6X6
TYE 8X7X4
TYE 8X7X5
TYE 8X7X6
TYE 8X7X7
TYE 8X8X4
TYE 8X8X5
TYE 8X8X6
TYE 8X8X8
TYE 9X6X6
TYE 9X7X6
TYE 9X7X7
TYE 9X8X5
TYE 9X8X6
TYE 9X8X8
TYE 10X4X4
TYE 10X6X4
TYE 10X6X6
TYE 10X7X7
TYE 10X8X6
TYE 10X8X7
TYE 10X8X8
TYE 10X9X8
TYE 10X10X4
TYE 10X10X8
TYE 12X8X6
TYE 12X8X8
TYE 12X9X8
TYE 12X10X4
TYE 12X10X8
TYE 12X10X10
TYE 12X12X10
TYE 14X14X4
TYE 14X14X8

FLEX DUCTS

R6 4"X25'
R6 6"X25'
R6 8"X25'
R6 10"X25'
R6 12"X25'
R6 14"X25'
R6 16"X25'
R6 18"X25'
R6 20"X25'
R6 22"X25'

R8 4"X25'
R8 6"X25'
R8 8"X25'
R8 10"X25'
R8 12"X25'
R8 14"X25'
R8 16"X25'
R8 18"X25'
R8 20"X25'

SPIRAL PIPES

SPIRAL PIPE 4"X10'
SPIRAL PIPE 5"X10'
SPIRAL PIPE 6"X10'
SPIRAL PIPE 7"X10'
SPIRAL PIPE 8"X10'
SPIRAL PIPE 9"X10'
SPIRAL PIPE 10"X10'
SPIRAL PIPE 12"X10'
SPIRAL PIPE 14"X10'
SPIRAL PIPE 16"X10'
SPIRAL PIPE 18"X10'
SPIRAL PIPE 20"X10'
SPIRAL PIPE 22"X10'
SPIRAL PIPE 24"X10'

REDUCERS

REDUCER 5"X4"
REDUCER 6"X4"
REDUCER 6"X5"
REDUCER 7"X6"
REDUCER 8"X6"
REDUCER 9"X7"
REDUCER 10"X4"
REDUCER 10"X6"
REDUCER 10"X9"
REDUCER 12"X6"
REDUCER 12"X8"
REDUCER 12"X10"
REDUCER 14"X10"
REDUCER 14"X12"
REDUCER 16"X12"
REDUCER 18"X16"
REDUCER 20"X18"

ADJUSTABLE ELBOWS

ADJUSTABLE ELBOW 3"
ADJUSTABLE ELBOW 4"
ADJUSTABLE ELBOW 5"
ADJUSTABLE ELBOW 6"
ADJUSTABLE ELBOW 7"
ADJUSTABLE ELBOW 8"
ADJUSTABLE ELBOW 9"
ADJUSTABLE ELBOW 10"
ADJUSTABLE ELBOW 12"
ADJUSTABLE ELBOW 14"
ADJUSTABLE ELBOW 16"
ADJUSTABLE ELBOW 18"
ADJUSTABLE ELBOW 20"
ADJUSTABLE ELBOW 22"
ADJUSTABLE ELBOW 24"
ADJUSTABLE ELBOW 28"

RETURN AIR CANS

RETURN AIR CAN 14"X14" 4"
RETURN AIR CAN 20"X14" 4"
RETURN AIR CAN 20"X16" 4"
RETURN AIR CAN 20"X20" 4"
RETURN AIR CAN 24"X12" 4"
RETURN AIR CAN 25"X14" 4"
RETURN AIR CAN 25"X16" 4"
RETURN AIR CAN 25"X20" 4"
RETURN AIR CAN 30"X10" 4"
RETURN AIR CAN 30"X12" 4"
RETURN AIR CAN 30"X14" 4"
RETURN AIR CAN 30"X20" 4"
RETURN AIR CAN 40"X20" 4"

FLASHINGS

3/4" FLASHING
1" FLASHING
2" FLASHING
3" FLASHING
4" FLASHING

DRYER VENTS

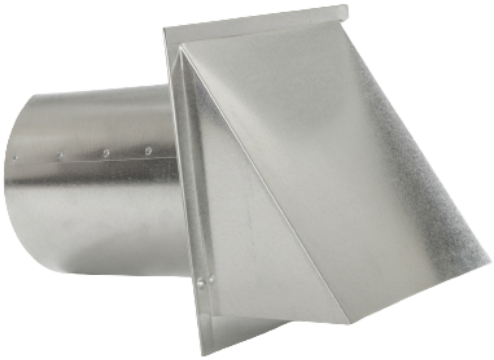

4" DRYER VENT 1"
STUCCO STP 26

SPIRAL END CAPS

SPIRAL 4" END CAP
SPIRAL 5" END CAP
SPIRAL 6" END CAP
SPIRAL 7" END CAP
SPIRAL 8" END CAP
SPIRAL 9" END CAP
SPIRAL 10" END CAP
SPIRAL 12" END CAP
SPIRAL 14" END CAP
SPIRAL 16" END CAP
SPIRAL 18" END CAP
SPIRAL 20" END CAP
SPIRAL 22" END CAP
SPIRAL 24" END CAP
SPIRAL 26" END CAP

SMOKE PIPES

SMOKE PIPE 4"X5'
SMOKE PIPE 5"X5'
SMOKE PIPE 6"X5'
SMOKE PIPE 7"X5'
SMOKE PIPE 8"X5'
SMOKE PIPE 9"X5'
SMOKE PIPE 10"X5'
SMOKE PIPE 12"X5'
SMOKE PIPE 14"X5'
SMOKE PIPE 16"X5'
SMOKE PIPE 18"X5'
SMOKE PIPE 20"X5'
SMOKE PIPE 20"X3'
SMOKE PIPE 22"X3'

SQUARE TO ROUNDS

SQTORD 6X4X4" 6" LONG
SQTORD 8X6X4" 6" LONG
SQTORD 10X8X6" 6" LONG
SQTORD 12X10X8" 12" LONG
SQTORD 14X12X10" 12" LONG
SQTORD 16X14X12" 12" LONG
SQTORD 18X16X14" 12" LONG
SQTORD 20X16X16" 12" LONG
SQTORD 20X18X18" 12" LONG
SQTORD 20X20X20" 12" LONG

TANK RACKS

TANK RACK 24"
TANK RACK 32"
TANK RACK 45"

ROUND SADDLES

SADDLE 4" ON ____ 26GA
SADDLE 5" ON ____ 26GA
SADDLE 6" ON ____ 26GA
SADDLE 7" ON ____ 26GA
SADDLE 8" ON ____ 26GA
SADDLE 9" ON ____ 26GA
SADDLE 10" ON ____ 26GA
SADDLE 12" ON ____ 26GA
SADDLE 14" ON ____ 26GA
SADDLE 16" ON ____ 26GA
SADDLE 18" ON ____ 22GA
SADDLE 20" ON ____ 22GA
SADDLE 22" ON ____ 22GA
SADDLE 24" ON ____ 22GA

DAMPERS

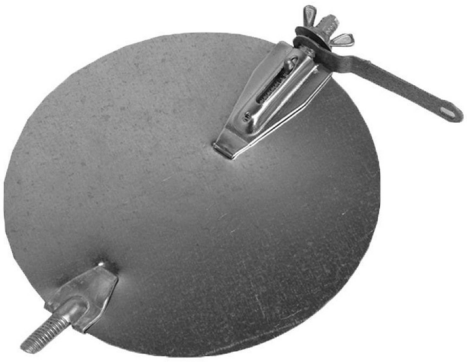

DAMPER 4"
DAMPER 6"
DAMPER 8"
DAMPER 10"
DAMPER 12"
DAMPER 14"
DAMPER 16"
DAMPER 18"
DAMPER 20"

CEILING BOXES

CB 4X4 4" COLLAR
CB 6X6 4" COLLAR
CB 6X6 5" COLLAR
CB 6X6 6" COLLAR
CB 8X6 7" COLLAR
CB 8X8 4" COLLAR
CB 8X8 5" COLLAR
CB 8X8 6" COLLAR
CB 8X8 7" COLLAR
CB 8X8 8" COLLAR
CB 10X8 8" COLLAR
CB 10X10 6" COLLAR
CB 10X10 7" COLLAR
CB 10X10 8" COLLAR
CB 10X10 9" COLLAR
CB 10X10 10" COLLAR
CB 12X8 7" COLLAR
CB 12X12 6" COLLAR
CB 12X12 7" COLLAR
CB 12X12 8" COLLAR
CB 12X12 9" COLLAR
CB 12X12 10" COLLAR
CB 12X12 12" COLLAR
CB 14X14 6" COLLAR
CB 14X14 10" COLLAR
CB 14X14 12" COLLAR
CB 14X14 14" COLLAR
CB 16X16 16" COLLAR

CEILING BOXES SIDE INLET

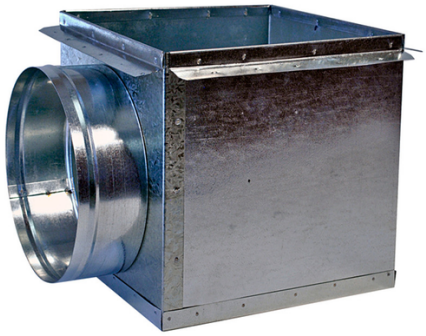

CBSI 6X6X5"
CBSI 8X8X6"
CBSI 10X10X8"
CBSI 12X12X10"
CBSI 14X14X12"

TEES

TEE 6X6X6"
TEE 8X8X8"
TEE 10X10X10"
TEE 12X12X12"
TEE 14X14X14"
TEE 16X16X16"

BAR TYPE REGISTERS

SQUARE
6X6"
8X8"
10X10"
12X12"
14X14"
16X16"

RECTANGLE
10X4"
10X6"
10X8"
12X6"
12X8"
14X6"
14X8"
16X6"
16X8"
18X6"
20X6"
20X8"
24X6"

STAMP FACE REGISTERS

SQUARE
6X6"
8X8"
10X10"
12X12"
14X14"
16X16"

RECTANGLE
6X4"
8X4"
10X6"
12X8"
14X6"
14X8"
16X6"

DIFFUSERS

SQUARE
6" ROUND
8" ROUND
10" ROUND
12" ROUND
14" ROUND

ROUND
RESIDENTIAL 6"
RESIDENTIAL 8"
RESIDENTIAL 10"
RESIDENIAL 12"
RESIDENTIAL 14"
COMMERCIAL 6"
COMMERICIAL 8"
COMMERCIAL 10"
COMMERCIAL 12"
COMMERCIAL 14"
COMMERCIAL 16"
COMMERCIAL 18"

FLOOR REGISTERS

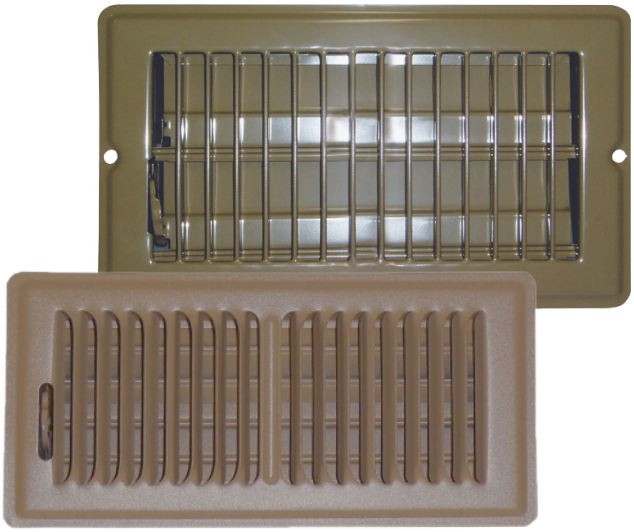

STAMP FACE
8X4"
10X4"
12X4"
14X4"
12X6"
14X6"
20X20"

BAR TYPE
10X6"
12X12"
14X20"
16X16"
20X20"

TRANSFERS

SQUARE
10X10"
12X12"
14X14"
16X16"
20X20"
24X24"

RECTANGLE
10X6"
10X8"
12X6"
12X10"
14X6"
14X8"
14X10"
14X12"
16X6"
16X8"
16X10"
16X12"
16X14"
18X6"
18X12"
20X6"
20X10"
20X16"
24X6"
24X8"
24X10"
24X12"
24X14"
25X16"
30X10"
30X14"
30X16"
36X12"
36X14"

STAMP FACE FILTER FRAMES

SQUARE
12X12"
14X14"
16X16"
18X18"
20X20"
24X24"

RECTANGLE
20X10"
20X12"
20X16"
24X12"
24X14"
25X14"
25X20"
30X10"
30X14"
30X16"
30X20"
40X20"

BAR TYPE FILTER FRAMES

SQUARE
12X12"
14X14"
16X16"
18X18"
20X20"
24X24"

RECTANGLE
16X10"
20X10"
20X14"
20X16"
24X10"
24X12"
25X14"
25X16"
25X20"
30X10"
30X12"
30X14"
30X16"
30X20"
40X20"

FILTERS

12X12X1"
14X14X1"
16X16X1"
16X16X2"
20X20X1"
20X20X2"
24X24X1"
10X20X1"
12X20X1"
14X20X1"
16X20X1"
10X24X1"
12X24X1"
14X25X1"
16X25X1"
16X25X2"
20X25X1"
20X25X2"
10X30X1"
12X30X1"
14X30X1"
16X30X1"
20X30X1"

MISCELLANEOUS

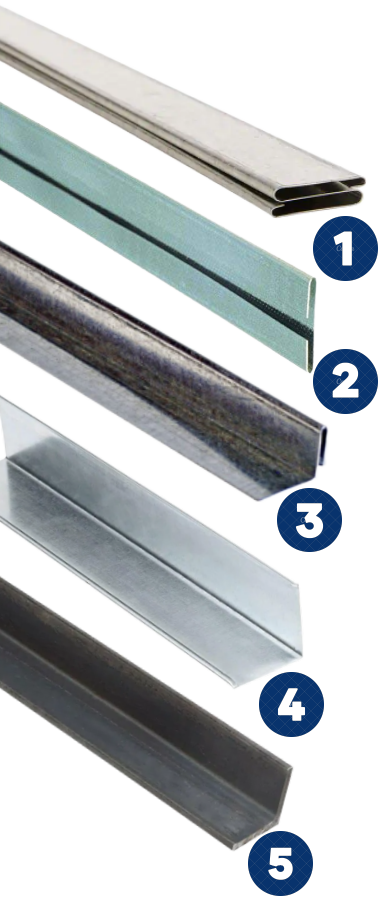

1. S CLEAT 26GA 10' LONG
2. DRIVE CLEAT 26GA 10' LONG
3. PLASTER GROUND 10' LONG
4. L-SHAPE FLASHING 2X2 10' LONG
5. ANGLE IRON 1.5X1.5X1/8 3' LONG
6. PVC 3/4" X 10'
7. RED WOOD 4X4
8. HANGER STRAP 1.5X10' (SINGLE)
9. LINE SET COVER 3X3X3 10' LONG
10. LINE SET COVER 4X4X4 10' LONG
11. LINE SET COVER CAP 3X3
12. LINE SET COVER CAP 4X4

MORE MISCELLANEOUS

1. DURO DYNE CABLE LOCK 3/32" CABLE (EACH)
2. CABLE LOCK 3/32" 10/BOX FOR WC3
3. 3/32" X 10' LOOPED CABLE
4. 3/32" WIRE ROPE 500' FOR CL122 CABLE
5. SELF TAPPING SCREWS IN A BAG #8 3/4"
6. BRUSH 2" FOR PAINT
7. ISO ANTI-VIBRATION PAD PACK (4)
8. 1.75X300' WEBBING STRAP
9. 1.5" 26GA DUCT STRAP 100' ROLL
10. SC-41 5/16 X 34' NEOPRENE
11. HANGING BRACKET

DUCT SEALERS

JSM GRAY SMOOTH DUCT SEALER
JSM GRAY FIBER DUCT SEALER

DISCONNECT SWITCHES

TP-30AMP DISCONNECT FUSED
TP-60AMP DISCONNECT FUSED
TP-60AMP-NF DISCONNECT NON FUSE

POWER WHIPS

6-34-6NM WHIP NM 3/4X"6'
6-12-6NM WHIP NM 1/2"X6'

ZIP TIES

ZIP TIES 36" (NATURAL) (50PZS)
ZIP TIES 48" (NATURAL) (50PZS)

THERMOSTATS

- HONEYWELL TH6210U2001/U T6 PRO PROG TSAT 2H/1C HP 1HC AAC
- BRAEBURN NON PROGRAMMBLE 1H/1C STAT 1020
- BRAEBURN UNIVERSAL 7, 5-2 DAY PROGRAMMABLE 1H/1C STAT 2020
- BRAEBURN TOUCH SCREEN PREMIER 7 DAY, 5-2 DAY OR NON PROGRAMMABLE 4H/2C STAT 5320

HEX DRIVERS

- MALCO REVERSIBLE HEX DRIVER 5/16 3/8 2" LONG
- MALCO REVERSIBLE HEX DRIVER 5/16 3/8 2 5/8" LONG
- MALCO REVERSIBLE HEX DRIVER 5/16 3/8 4" LONG
- MALCO REVERSIBLE HEX DRIVER 5/16 3/8 6" LONG
- MALCO REVERSIBLE HEX DRIVER 5/16 1/4 2" LONG
- MALCO REVERSIBLE HEX DRIVER 5/16 1/4 2 5/8" LONG
- MALCO REVERSIBLE HEX DRIVER 5/16 1/4 4" LONG
- MALCO REVERSIBLE HEX DRIVER 5/16 1/4 6" LONG

PVC

PVC 3/4" SLIP TEE (401-007)
PVC 3/4" 90 ELBOW SXS (406-007)
PVC 3/4" 90 SLIP X FPT (407-007)
PVC 3/4" MPT X SLIP 90 ELL (410-007)
PVC 3/4" SXS 45 ELBOW (417-007)
PVC 3/4" SXS COUPLING (429-007)
PVC 3/4" FEMALE ADAPTER SLXFIP (435-007)
PVC 3/4" MALE ADAPTER (436-007)
PVC 3/4" SLIP CAP (447-007)
PVC 3/4" "R" RUN TRAP (488-07)
PVC 3/4" P TRAP (489-007)

TAPES

3"X50 YDS - FSK TAPE ARTIC WEATHER APPROVED
SHURTAPE 3"X50 FOIL TAPE
SHURTAPE 2"X50 FOIL TAPE
POLYKEN 2 UL181FX DUCT TAPE
TAPE HARDCAST 2"X50'
TAPE HARDCAST 3"X50'

MULTIZONE MINI SPLITS

OUTDOOR
OUTDOOR 18,000 BTU 2 DRIVES 22 SEER MULTIZONE
OUTDOOR 27,000 BTU 3 DRIVES 22 SEER MULTIZONE
OUTDOOR 36,000 BTU 4 DRIVES 22 SEER MULTIZONE
OUTDOOR 48,000 BTU 5 DRIVES
INDOOR
INDOOR 9,000 BTU 22 SEER MULTIZONE
INDOOR 12,000 BTU, 22 SEER MULTIZONE
INDOOR 18,000 BTU, 22 SEER MULTIZONE
MIRAGE INDOOR 24,000 BTU

INVERTER
VENTUS
MULTIZONE

35% ENERGY SAVING

SWEET DREAMS

FOLLOW ME

1-2 ZONE		
OUTDOOR 18K	1 DRIVE	INDOOR 12K
	2 DRIVES	INDOOR 9K + 9K
		INDOOR 9K + 12K
		INDOOR 12K + 12K

MULTI-ZONE COMBINATION

ENHANCED ALUMINUM FINS

HYDROPHOBIC COATING TO AVOID CORROSION

2-3 ZONE		
OUTDOOR 27K	2 DRIVES	INDOOR 9K + 9K
		INDOOR 9K + 12K
		INDOOR 9K + 18K
		INDOOR 12K + 12K
		INDOOR 12K + 18K
		INDOOR 18K + 18K
	3 DRIVES	INDOOR 9K + 9K + 9K
		INDOOR 9K + 9K + 12K
		INDOOR 9K + 9K + 18K
		INDOOR 9K + 12K + 12K
		INDOOR 12K + 12K + 12K

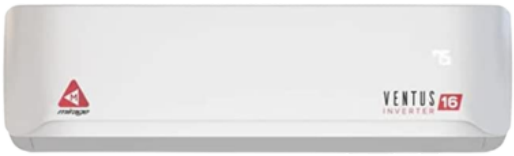

HVAC MIRAGE

Think smart. Think cool. Think Mirage.

2-4 ZONE		
OUTDOOR 36K	2 DRIVES	INDOOR 9K + 18K
	3 DRIVES	INDOOR 9K + 9K + 9K
		INDOOR 9K + 9K + 12K
		INDOOR 9K + 9K + 18K
		INDOOR 9K + 12K + 12K
		INDOOR 9K + 12K + 18K
		INDOOR 9K + 18K + 18K
		INDOOR 12K + 12K + 12K
		INDOOR 12K + 12K + 18K
		INDOOR 12K + 18K + 18K
	4 DRIVES	INDOOR 9K + 9K + 9K + 9K
		INDOOR 9K + 9K + 9K + 12K
		INDOOR 9K + 9K + 9K + 18K
		INDOOR 9K + 9K + 12K + 12K
		INDOOR 9K + 9K + 12 + 18K
		INDOOR 9K + 12K + 12K + 12K
		INDOOR 12K + 12K + 12K + 12K

2-5 ZONE		
OUTDOOR 48K	2 DRIVES	INDOOR 18K + 18K
		INDOOR 18K + 24K
		INDOOR 24K + 24K
	3 DRIVES	INDOOR 9K + 9K + 18K
		INDOOR 9K + 9K + 24K
		INDOOR 9K + 12K + 12K
		INDOOR 9K + 12K + 18K
		INDOOR 9K + 12K + 24K
		INDOOR 9K + 18K + 18K
		INDOOR 9K + 18K + 24K
		INDOOR 9K + 24K + 24K
		INDOOR 12K + 12K + 12K
		INDOOR 12K + 12K + 18K
		INDOOR 12K + 12K + 24K
		INDOOR 12K + 18K + 18K
		INDOOR 12K + 18K + 24K
		INDOOR 12K + 24K + 24K
		INDOOR 18K + 18K + 18K
		INDOOR 18K + 18K + 24K

2-5 ZONE		
OUTDOOR 48K	4 DRIVES	INDOOR 9K + 9K + 9K + 9K
		INDOOR 9K + 9K + 9K + 12K
		INDOOR 9K + 9K + 9K + 18K
		INDOOR 9K + 9K + 9K + 24K
		INDOOR 9K + 9K + 12K + 12K
		INDOOR 9K + 9K + 12K + 18K
		INDOOR 9K + 9K + 18K + 18K
		INDOOR 9K + 9K + 18K + 24K
		INDOOR 9K + 12K + 12K + 12K
		INDOOR 9K + 12K + 12K + 18K
		INDOOR 9K + 12K + 12K + 24K
		INDOOR 9K + 12K + 18K + 18K
		INDOOR 9K + 18K + 18K + 18K
		INDOOR 12K + 12K + 12K + 12K
		INDOOR 12K + 12K + 12K + 18K
		INDOOR 12K + 12K + 12K + 24K
		INDOOR 12K + 12K + 18K + 18K

2-5 ZONE		
OUTDOOR 48K	5 DRIVES	INDOOR 9K + 9K + 9K + 9K + 9K
		INDOOR 9K + 9K + 9K + 9K + 12K
		INDOOR 9K + 9K + 9K + 9K + 18K
		INDOOR 9K + 9K + 9K + 9K + 24K
		INDOOR 9K + 9K + 9K + 12K + 12K
		INDOOR 9K + 9K + 9K + 12K + 18K
		INDOOR 9K + 9K + 9K + 18K + 18K
		INDOOR 9K + 9K + 12K + 12K + 12K
		INDOOR 9K + 9K + 12K + 12K + 18K
		INDOOR 9K + 12K + 12K + 12K + 12K
		INDOOR 9K + 12K + 12K + 12K + 18K
		INDOOR 12K + 12K + 12K + 12K + 12K

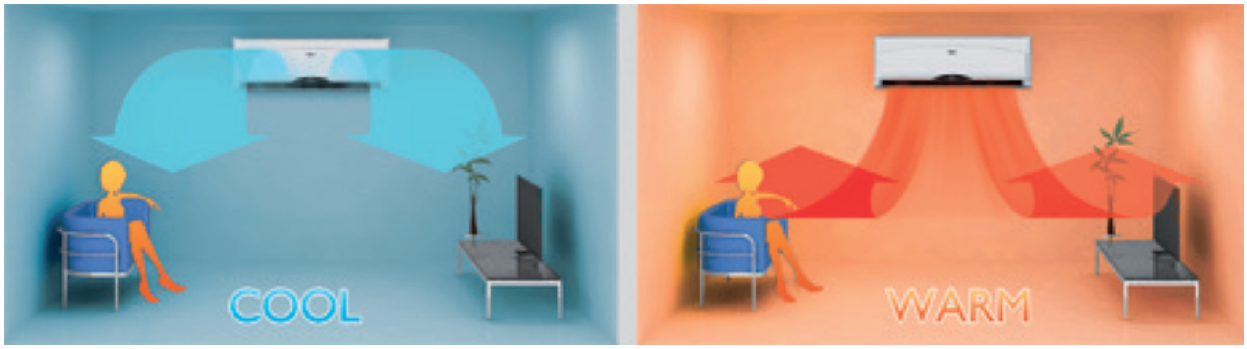

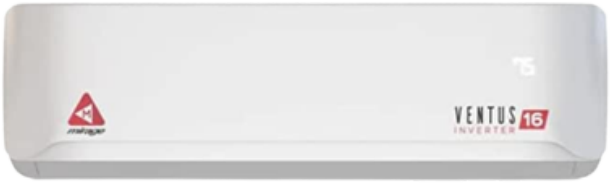

MINI SPLITS

3/4 TON 19 SEER 12K/110V
1 TON 20 SEER 12K/110V
1 TON 19 SEER 12K/220V
1 1/2 TON 19 SEER 18K/220V
2 TON 20 SEER 24K/220V
3 TON 19 SEER 36K/220V

GENTLE COOL WIND

TITAN GOLD FIN

SELF CLEANLINESS

VENTUS X INVERTER

FILTER CLEANING REMINDER

SMART AIR FLOW

NO SCREW ONLY BUCKLES

MIDWEST TOOLS

5-BLADE CRIMPER (MWT-C5)
3" FORGED OFFSET SEAMER (MWT-ST2)
BULLDOG AVIATION SNIP (MWT-6716B)
OFFSET AVIATION SNIP - LEFT (MWT-6510L)
OFFSET AVIATION SNIP - RIGHT (MWT-6510R)
2-PIECE OFFSET AVIATION SNIP (MWT-6510C)
POOKIE BUSTER SET 1/4" & 5/16" (MWT-PBSET01)

MWT-C5

MWT-ST2

MWT-6716B

MWT-PBSET01

MWT-6510L

MWT-6510R

MWT-6510C

VISIT US

Monday - Friday: 6:00 AM - 5:00 PM
Saturday -Sunday - Closed

We're Closed On Major Holidays

CONTACT US

Phone: (480) 668-5844
Fax: (623) 505-2662

257 E. Broadway Rd
Mesa, AZ 85210
USA

Phone: (623) 215-7566
Fax: (623) 505-2662

3120 W. Grand Ave
Phoenix, AZ 85017
USA